FRD FURUKAWA

FURUKAWA Power & Passion 150

DCR22

Down-the-Hole Crawler Drill



FRD FURUKAWA ROCK DRILL

DCR22

PREMIUM DOWN THE HOLE (DTH) HYDRAULIC CRAWLER DRILL FOR SURFACE DRILLING IN QUARRIES AND MINES

- ► US EPA Tier 4final/EU Stage 4 emission control-compliant engine
- ► Higher drilling performance and lower fuel consumption from new features
- ► Comfortable operator environment with heating and filtered air conditioning, as well as fully integrated multi-funtional display
- ► Well proven drilling and rod changing system
- ► Easy all-round maintenance





INCREASED FOCUS ON HEALTH, SAFETY AND ERGONOMICS

- ► Interlocks, safety equipment and access points in- and outside the machine ensure a safer operating environment
- ► A new single display integrates all engine and operational information, diagnostic functions and settings into one
- ► Modern technology machine control makes operating and maneuvering easier











HEALTH & SAFETY IN THE CABIN



The left control box moves forward and backwards and acts as an interlock. In the back position, it eliminates all hydraulic pressure to the travel, feed and rotation functions

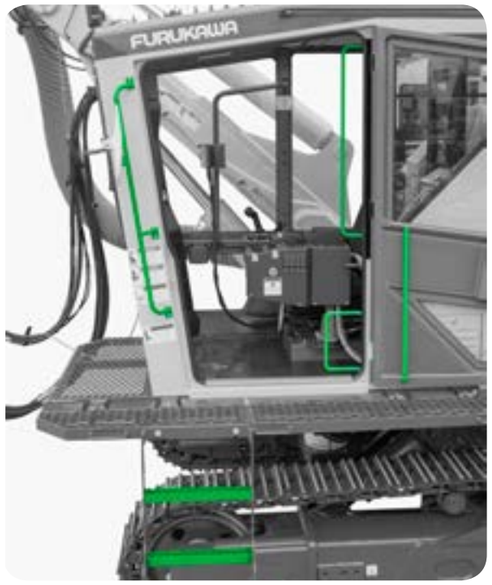

Access to and egress from the cabin are made safer by providing three point access



The Rollover Protective Structure (ROPS) and Falling Object Protective Structure (FOPS) certified cabin wraps the operator in a protective cocoon, with a steel guard on the top window for further protection against falling objects. In case of emergency, a window hammer is provided inside the cabin for getting out through one of the windows.

79 Noise level (dB) inside the cabin

27 Percentage increase in cabin size to provide higher comfort levels, coupled with a heated, air-suspended seat

2 Number of fire extinguishers on the machine, with the option of adding automatic or manual fire suppression

9 Number of windows in the cabin, in addition to two rear facing cameras

CABIN CONTROLS

① Rod changer control lever
② Upper breakout clamp switch
③ Lower breakout clamp switch
④ Guideshell control lever
⑤ Tube guide switch
⑥ Travel levers right and left
⑦ Breakout clamp loosening lever
⑧ Air flushing & dust collector lever
⑨ Drilling lever
⑩ Torque up switch
⑪ Feed pressure adjustment
⑫ Lower clamp unlock switch
⑬ Boom and guideshell unlock switch
⑭ Oscillating up switch
⑮ Oscillating down switch
⑯ Front wiper switch
⑰ Top wiper switch
⑱ Front lights
⑲ Rear lights
⑳ DPF switch (Stage 4 engine only)
㉑ Engine throttle switches (x4)
㉒ Ignition
㉓ Horn
㉔ Feed speed adjustment
㉕ Boom control lever
㉖ Emergency stop switch
㉗ Rod changer manual control switches

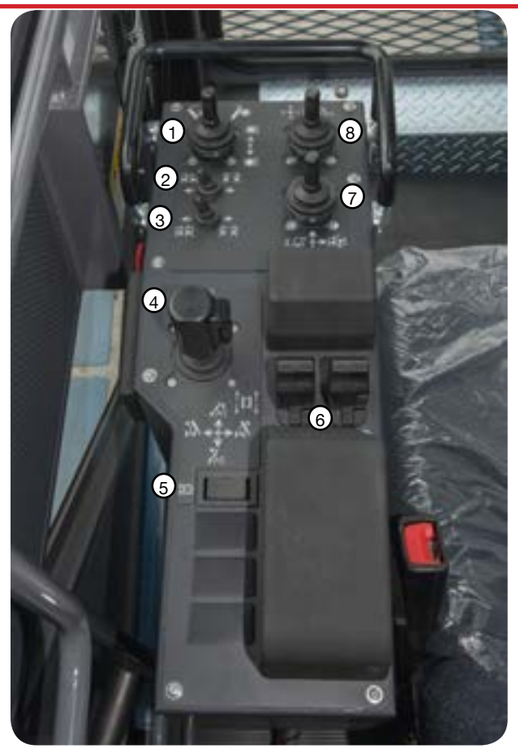

Left console

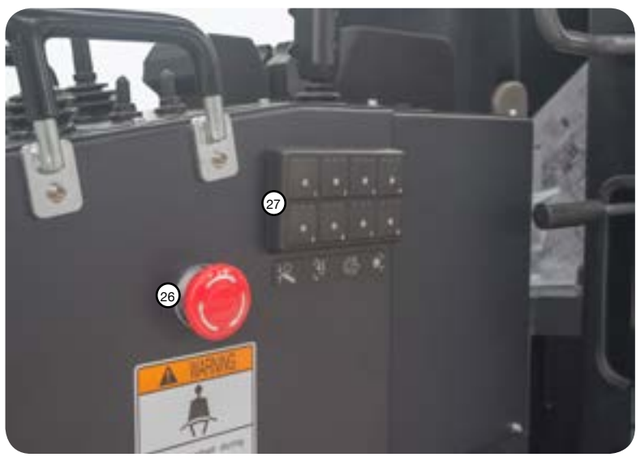

Left console side view



Right console



► Centralized draining points for lubricants and liquids

MAINTENANCE





► Ground level service



► Horizontal guideshell position for easier and safer maintenance





► Large opening doors for access to main components and service parts

KEY FEATURES & IMPROVEMENTS



Full function color display: diagnostics, settings, controls, camera view





Side & rear cameras



Cyclone type pre-filters for engine and compressor air intake



Angle indicators on the boom and guideshell



LED lights all around



Two side steps for safer access to working platform



Increased torque from rotary head, increased length and diameter for drilling tubes



Traction force increased by 50% over previous model and track frame strength improved



Angled installation of breaking clamps to give better visibility from the cabin. Increased clamping force to ease loosening of rods. Increased hood slide length.



Compressor and dust collector capacity increased for better flushing and removing of drill cuttings

DCR22

EFFICIENCY AND PRODUCTIVITY



THE BENEFITS OF CHANGE

Reduced Fuel Consumption

- ► High efficiency compressor - higher air delivery at lower engine speed, resulting in less fuel used per meter drilled
- ► Larger diameter drilling tubes means lower flushing volume at lower engine speeds can deliver the same upwards flushing velocity

Improved Productivity

- ► Increased torque from the rotary head, therefore more consistent production in bad ground
- ► Longer drilling tubes means there is less time wasted on adding drilling tubes, therefore increased productivity
- ► Higher break-out clamping force, therefore less time lost on removing drilling tubes after drilling
- ► Implementation of a collaring mode which also means more effective and accurate start of drilling

Improved Ergonomics

- ► Larger cabin means more comfort for the operator
- ► Reduction in interior noise levels
- ► Re-designed drilling controls are now more user friendly
- ► One single display to control all settings, history, diagnostics, pressure levels and engine data

SPECIFICATIONS

COMPONENT	IMPERIAL	METRIC
DIMENSIONS AND WEIGHT		
Operating Weight (A)*	56,227 lb	25,500 kg
Overall Weight (B)**	58,433 lb	26,500 kg
Overall Length	36’2”	11,035 mm
Shipping Length	40’5”	12,310 mm
Overall Width	14’3”	4,335 mm
Shipping Width	8’10”	2,700 mm
Overall Height	15’7”	4,750 mm
Shipping Height	11’6”	3,500 mm
UNDERCARRIAGE		
Track Length	12’5”	3,785 mm
Ground Contact Length	9’9”	2,980 mm
Track Width	1’1”	330 mm
Ground Contact Pressure ***	18.4 psi	127 kPa
Ground Clearance	1’7”	475 mm
Frame Oscillation Angle	±7.5°	
Max Tramming Speed	2.2 mph	3.5 km/h
Gradeability	46.6% (25°)	
Max Traction Force	35,969 lb-f	160kN
ROTARY HEAD		
Type	DowMax ME350	
Reduction Ratio	1:3.071	
Max Torque	3,098 ft-lb	4.2 kN-m
Max Rotation Speed	120rpm	120min^{-1}
Bit Range	3.5-6.5 “	89-165 mm
ENGINE		
Make & Model	CATERPILLAR C13 (Tier 4F/Stage 4)	
Type	Diesel, Water-cooled, 6 cylinders	
Piston Displacement	2.7 gal	12.5 L
Power Output	440 hp @ 2,000rpm	328 kW @ 2,000 min^{-1}
Fuel Capacity	180.4 gal	820 L
DEF Capacity	7.5 gal	34 L
COMPRESSOR		
Model	PDSK900-S20	
Type	2 Stage Screw compressor	
Manufacturer	AIRMAN	
Free Air Delivery	858-953 cfm	24.3-27 m^3/min

COMPONENT	IMPERIAL	METRIC
BOOM		
Model	JF325	
Type	Non-Extendable	
Boom Lift Angle (Up/Down)	49° / 13°	
Boom Swing Angle (Right / Left)	30° / 8°	
GUIDE SHELL		
Model	GH834	
Length	32’11”	10,030 mm
Feed Length	19’1”	5,827 mm
Feed Type	Hydraulic motor driven chain	
Guide Slide Length	4’11”	1,500mm
Guide Swing Angle (Right / Left)	88° / 16°	
Guide Tilt Angle	118°	
Max Rod Pull-Out Force	7,868 lb-f	35 kN
DUST COLLECTOR		
Model	A885	
Suction Capacity	2,649 cfm	75 m^3/min
Number of Filter Elements	12	
Type of Dust Ejection	Automatic air pulse jet	
ROD CHANGER		
Model	GR803	
Number of Tube Storage	8 pieces (16’ / 5,000mm) or 4 (20’ / 6,000mm)	
Tube Length	16’ or 20’	5,000 mm or 6,000 mm
Tube Diameter	3 ~ 4.5 “	76 ~ 114 mm
HYDRAULIC SYSTEM		
Variable Displacement PV Pump	PV Pump x 2	
Fixed Displacement Pump	Gear Pump x 3	
Hydraulic Oil Reservoir Capacity	61.6 gal	280 L
ELECTRICAL		
Battery	12V x 2; 140Ah/5h	
Lights	24V; 70W x 4	
Voltage	24V DC	

Note:
* Operating Weight (A) includes weight of fuels and oils (full)
** Operating Weight (B) includes Operating Weight (A) plus operator, DTH hammer (5”), bit, drilling tubes (4.5” / 114mm) and cushion sub
*** Ground contact pressure is calculated with Operating Weight (A)

Product Specifications may change without notice

DIMENSIONS

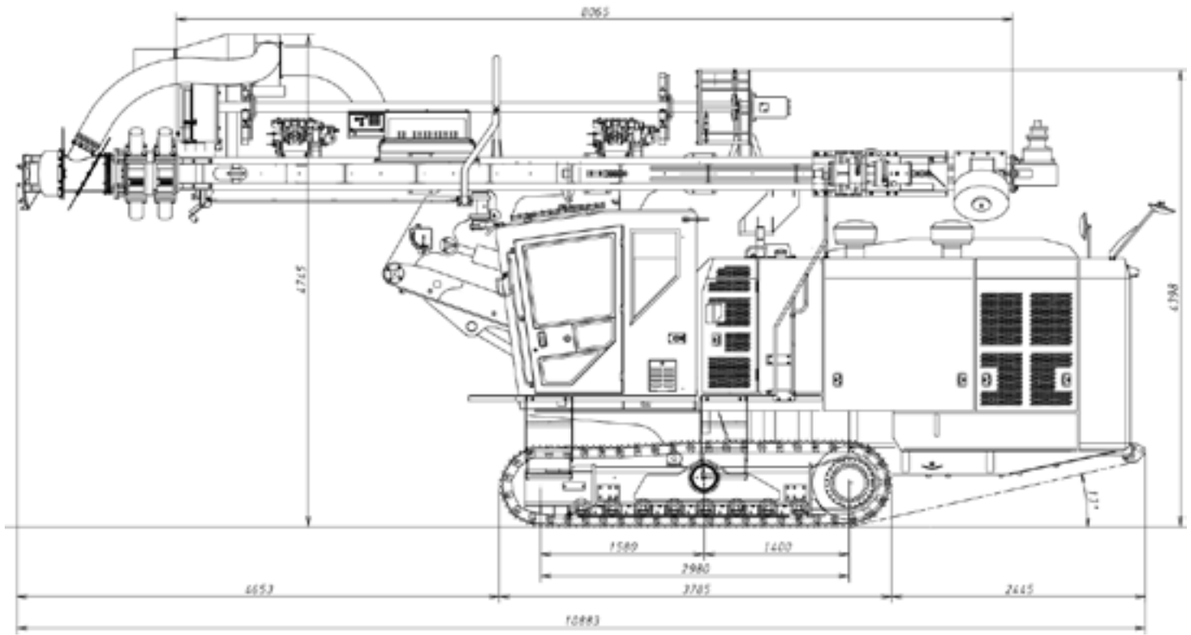
8065
4745
4398
1589
1400
2980
4653
3785
2445
10883

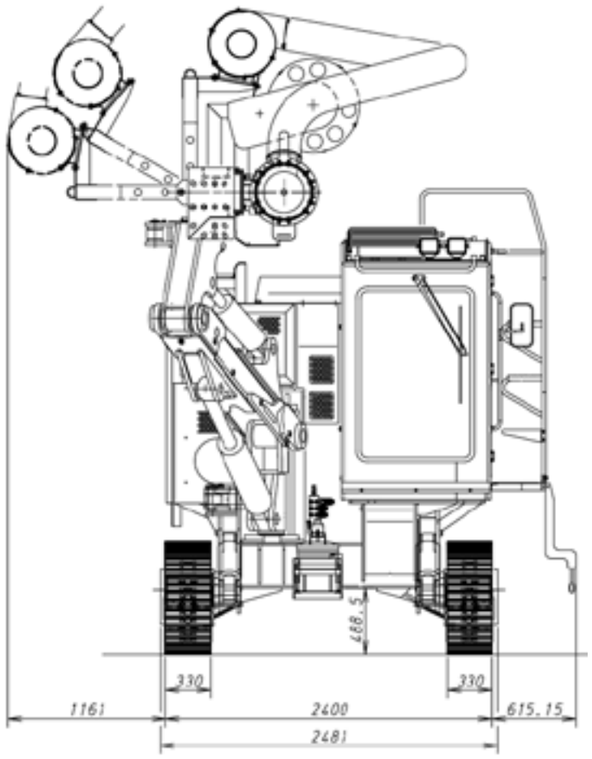
488.5
330
330
1161
2400
615.15
2481









Furukawa Rockdrill Europe BV
Proostwetering 29
3543 AB Utrecht,
The Netherlands
Phone +31-(0)30-2412277
Fax +31-(0)30-2412305
www.frd.eu